Focusrite®

INITIAL	ISSUE	DATE
STJ	1:00	17-03-15

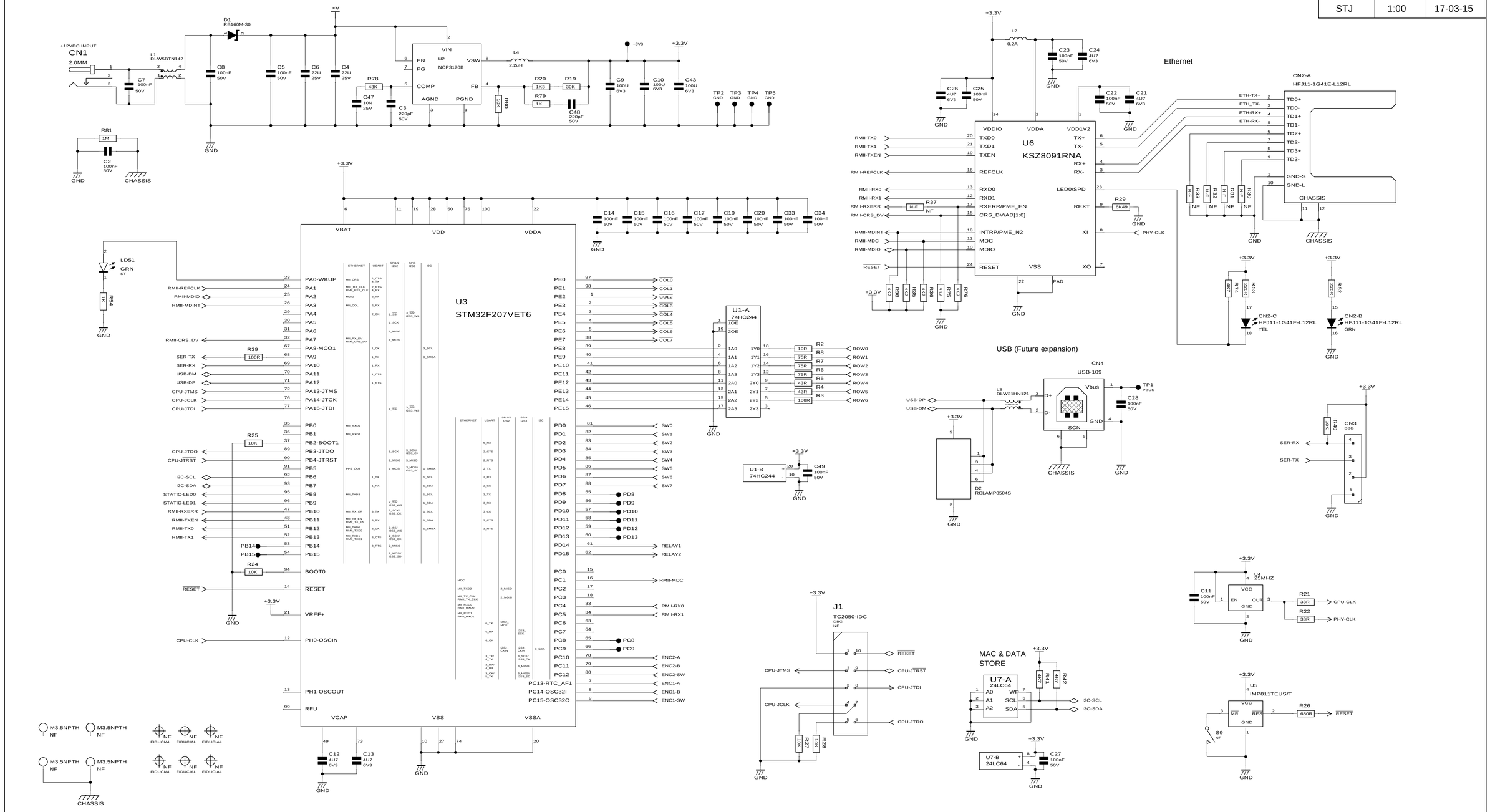

By downloading or using this file, the user agrees to be bound by the terms of the license agreement located at http://ocaalliance.com/EULA as an original contracting party.

NOTES

DRN. Simon Jones

DATE 17-03-15

Designed and devloped by the OCA Alliance (http://ocaalliance.com/), in association with:

Focusrite Audio Engineering (http://www.focusrite.com)

Bosch Engineering Core Platform

Attero Tech (http://www.atterotech.com/)

OCA PI:

OCA Lite Development / Demo Board

PSU / CPU

DRG NO. FD001113

SHT. 1 OF 3

Focusrite®

INITIAL	ISSUE	DATE
STJ	1:00	17-03-15

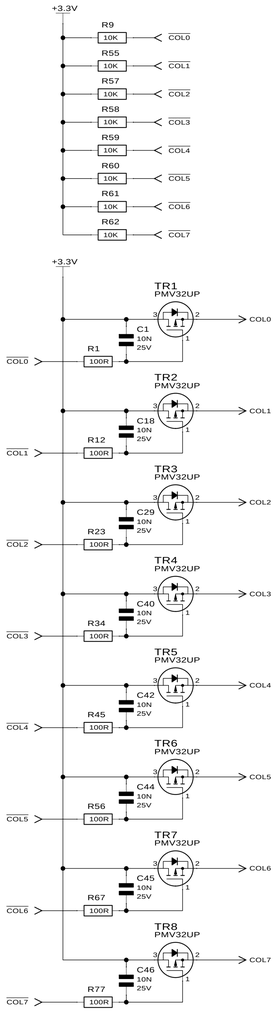

Meters

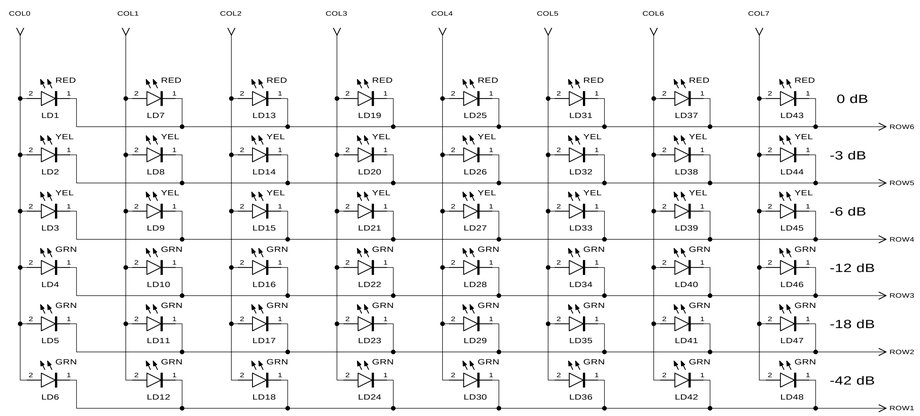

LD100

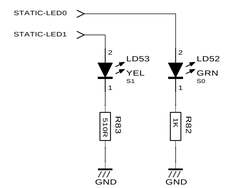

Swtiches

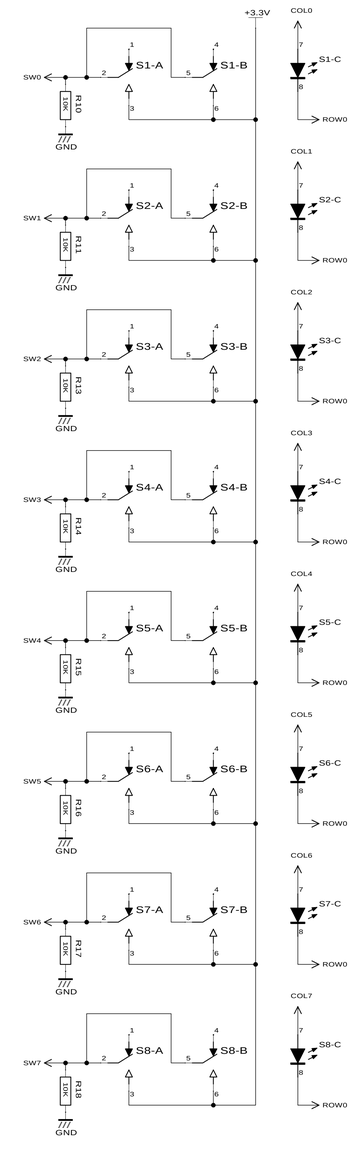

Encoders

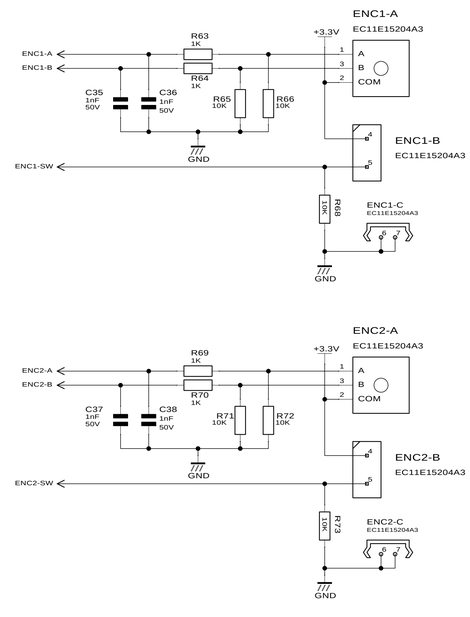

External Relays

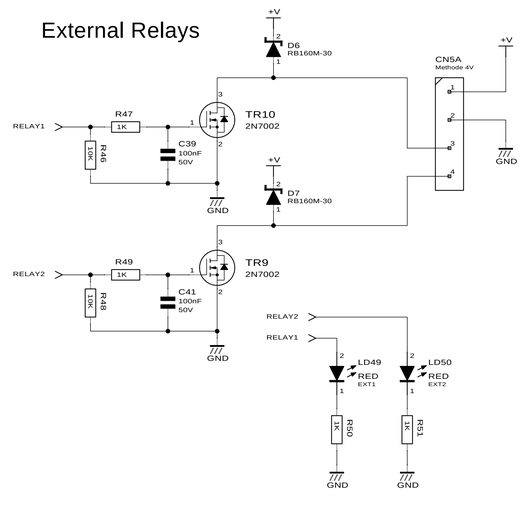

By downloading or using this file, the user agrees to be bound by the terms of the license agreement located at http://ocaalliance.com/EULA as an original contracting party.

NOTES

DRN. Simon Jones

DATE 17-03-15

Designed and devloped by the OCA Alliance (http://ocaalliance.com/), in association with:

Focusrite Audio Engineering (http://www.focusrite.com)

Bosch Engineering Core Platform

Attero Tech (http://www.atterotech.com/)

OCA PI:

OCA Lite Development / Demo Board

User Interface

DRG NO. FD001113

Focusrite®

INITIAL	ISSUE	DATE
STJ	1:00	17-03-15

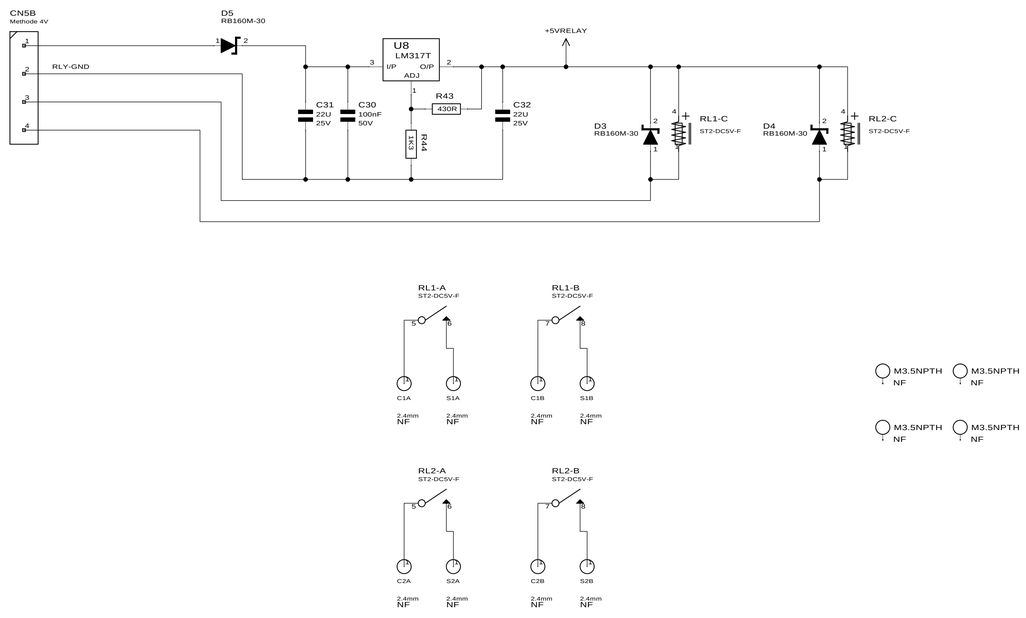

By downloading or using this file, the user agrees to be bound by the terms of the license agreement located at http://ocaalliance.com/EULA as an original contracting party.

NOTES

DRN. Simon Jones

DATE 17-03-15

Designed and devloped by the OCA Alliance (http://ocaalliance.com/), in association with:

Focusrite Audio Engineering (http://www.focusrite.com)

Bosch Engineering Core Platform

Attero Tech (http://www.atterotech.com/)

OCA PI:

OCA Lite Development / Demo Board

Relay Break-off

DRG NO. FD001113